RLCND06

6w Reon LED Candle, Frosted, 20000hrs

Product Overview

The Reon range from Kosnic is a selected line of 20,000 hour energy saving retrofit LED lamps. Reliable, affordable and easy to install, Reon LEDs surpass the high quality standards that home owners and lighting professionals demand for lower cost applications. The Reon LED Frosted Candle lamp is the perfect energy efficient and high quality solution to directly replace traditional halogen lamps. Compatible with existing halogen fittings, this product will save you up to 85% of the energy needed to power its traditional equivalent without compromising on brightness.

Unit D2 Kennetside, Bone Lane
NEWBURY, BERKSHIRE
T: 01635 523 713 E: sales@kosnic.com W: http://www.kosnic.com

Features

Save energy up to 85% compared with filament lamp.

Direct replacement of B22, E14 or E27 lamp.

High lumen output.

Long life of 20,000hrs.

Instant start.

No UV output.

Mercury free.

Specifications

	RLCND06B22-30-N	RLCND06E14-30-N	RLCND06E27-30-N
Fitting	B22	E14	E27
Shape / Type	Candle	Candle	Candle
Colour Finish	White	White	White
Optics Type	Frosted	Frosted	Frosted
Wattage (w)	6	6	6
Equivalent Wattage (w)	41	41	41
Total Lumens (lm)	490	490	490
Input Current (mA)	46	46	46
Input Voltage	220-240Vac	220-240Vac	220-240Vac
CCT Temperature (k)	3000	3000	3000
CCT Name	Warm White	Warm White	Warm White
Rated Life (hrs)	20000	20000	20000
Switch Cycles	50000	50000	50000
CRI	81	81	81
Dimmable	No	No	No
Retrofit	Yes	Yes	Yes
Power Factor	0.57	0.57	0.57
Start Time (s)	0.45	0.45	0.45
Warm-up Time (s)	0.5	0.5	0.5
Length (mm)	99	102	100
Width (mm)	37	37	37
Depth (mm)	37	37	37
Ambient Temperature (°C)	-20 to 40	-20 to 40	-20 to 40

Energy Label

	RLCND06B22-30-N	RLCND06E14-30-N	RLCND06E27-30-N
Energy Class	A+	A+	A+
Energy Consumption (kWh/1000h)	6	6	6

Packaging

	RLCND06B22-30-N	RLCND06E14-30-N	RLCND06E27-30-N
UPC Code	0609207992202	0609207992219	0609207992226
Outer Box Length (mm)	455	455	455
Outer Box Width (mm)	220	220	220
Outer Box Height (mm)	155	155	155
Volume	0.0155155	0.0155155	0.0155155
Box Quantity	50	50	50
Outer Box Weight (kg)	2.8	2.8	2.8

RLCND06B22-30-N

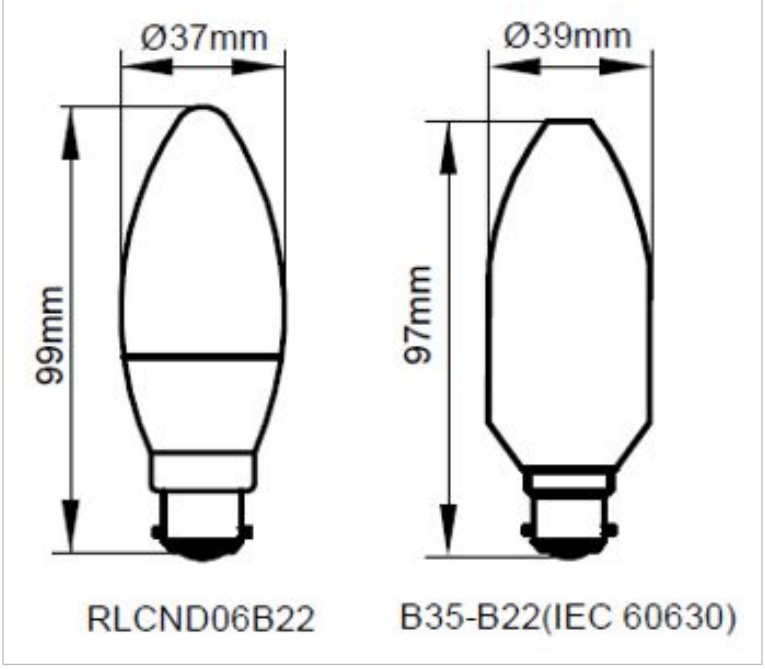

RLCND06E14-30-N

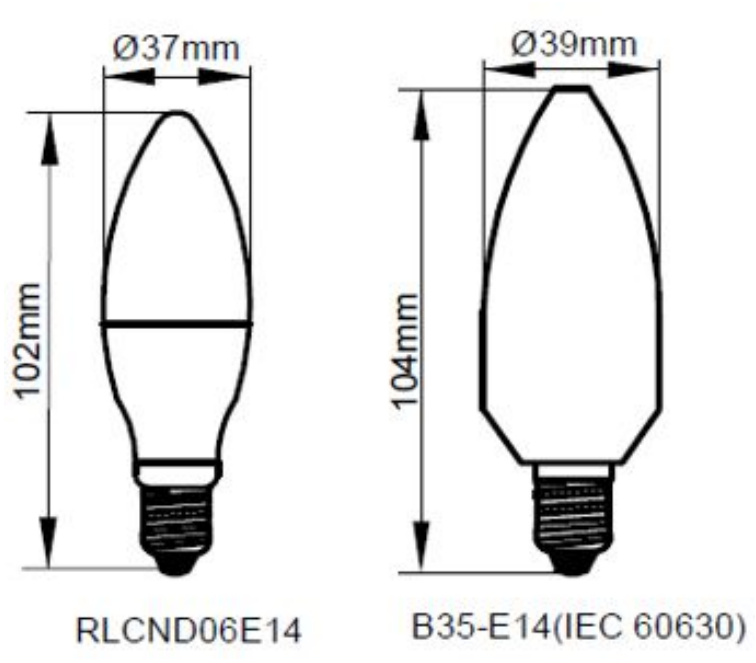

Unit D2 Kennetside, Bone Lane
NEWBURY, BERKSHIRE
T: 01635 523 713 E: sales@kosnic.com W: http://www.kosnic.com

RLCND06E27-30-N

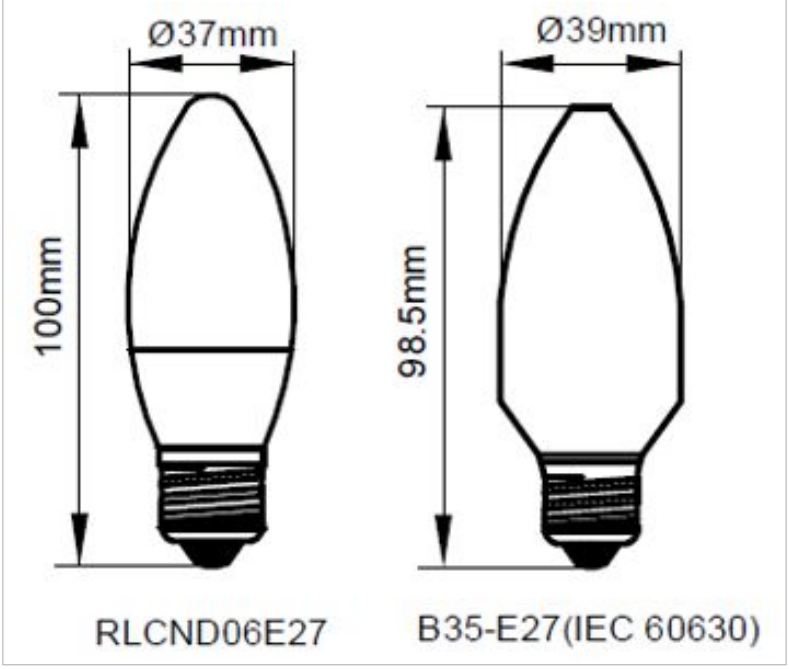

RLCND06B22-30-N
RLCND06E14-30-N
RLCND06E27-30-N

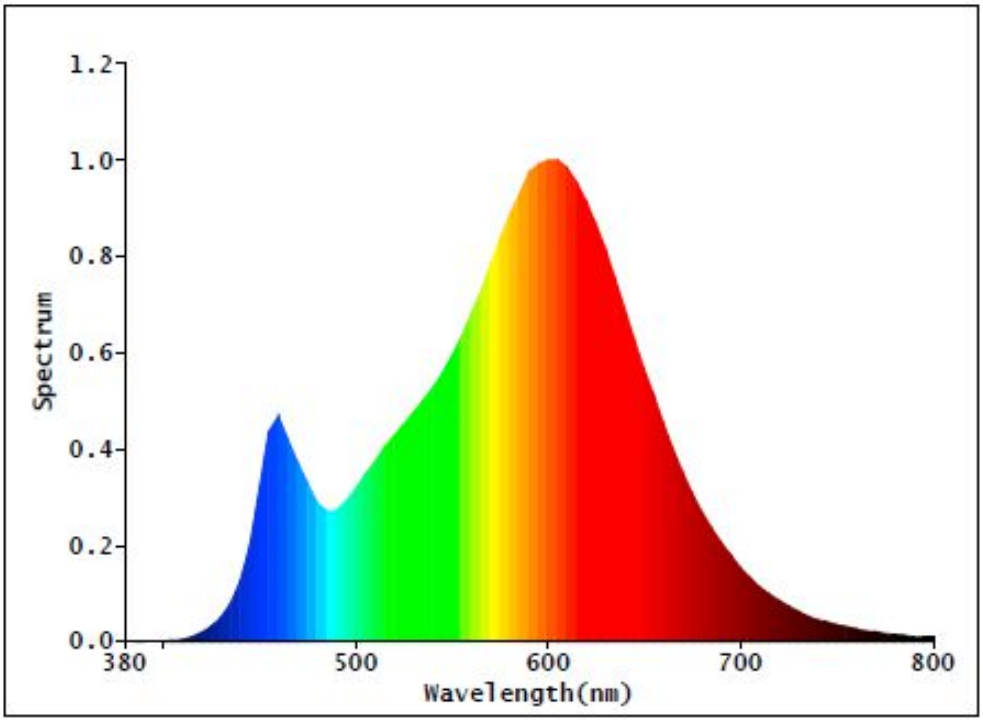

Datasheet generated from http://www.electrika.com last updated Friday, November 17, 2017 3:10:27 PM

Unit D2 Kennetside, Bone Lane
NEWBURY, BERKSHIRE
T: 01635 523 713 E: sales@kosnic.com W: http://www.kosnic.com